Dentalsalemall

www.dentalsalemall.com

DENTAL LED LAMP

Model: KY-P126

USER MANUAL

Preface

Please kindly read this user manual before assembling and use this product, and keep well for repeated use. Please carefully follow the the instruction and do the maintenance correctly.Please mind the passage with "Warn" and "Attention", read carefully, and follow strictly, avoid to do harm to user and the device.

Please contact our sales agent immediately for repair when you find something wrong with this device.

● Safety cautions

Before starting this device, please obey the basic safety precaution listed below, so as to keep away of the risk of damage to device, or harm to user,as well as causing fire, electric shock.

∗ Comply the instruction on the device and the manual, if you can not understand the instruction please ask our after-sales serve staff or sales agent for help.

∗ Please shut down the power supply before repairing or cleaning the device.

∗ No placing and hooking any heavy things on the device.

∗ Please only adjust the controllable items mention in the instruction correctly, adjusting other controlling volume wrongly will damage the device. This manual is limited to be used for KY-P126, the data or details shown herein are available when this manual post, and we may revise some index or design without notifying the users.

⚠warn： No using the power wire unsuitable to this device, otherwise, it must degrade its performance, even damage the device, cause fire or electric shock. Do not remove or mend the device without agreement from our agent or our technician, thus avoid the incident of electricity shock and damage to people or device.

⚠**Attention**：Warranty is not valid if these rules below are not followed.

(1) Follow the instruction correctly;

(2) Use the device according the instruction only;

(3) Power supply wire must be qualified with demand of the power of this dental lamp.

(4) This dental lamp should be fixed firmly;

(5) Any repair,modification, or revision to this Dental lamp should be performed by the engineer appointed by us.

(6) The components needed to be changed should be adopted the ones for ours, otherwise may reduce the performance and or destroy the device.

一、Description

1. Intended Use

The item is used for the lighting of the medicine Department,no checking function.

2. General Introduction

Products structure and components，as showed below, picture 1:

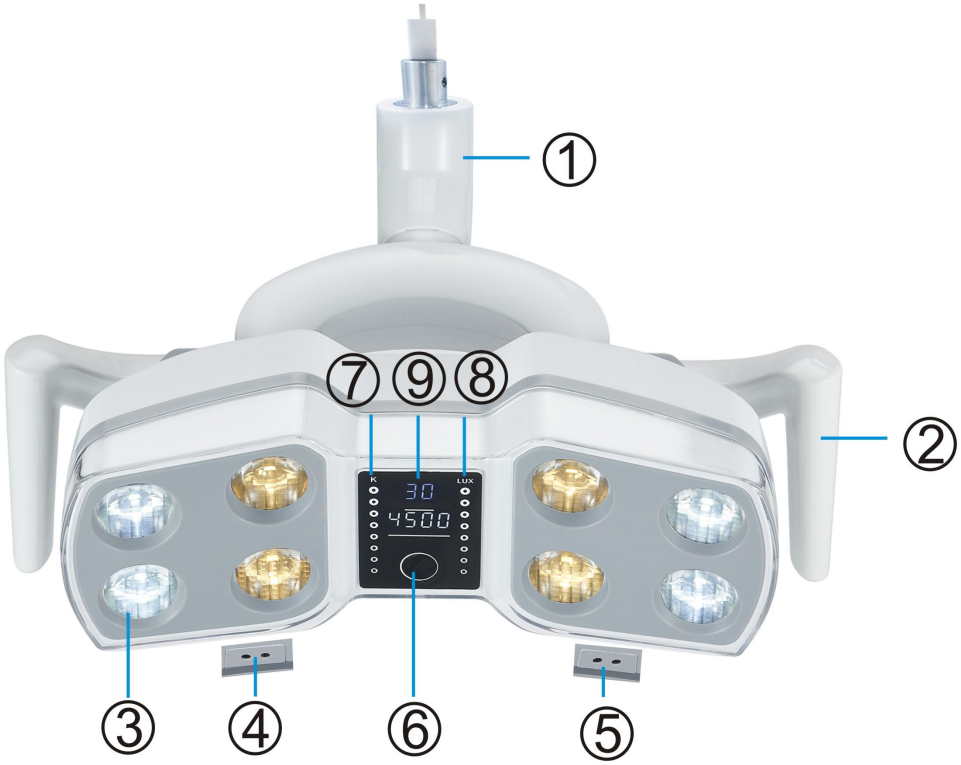

Picture 1

1). —rotation shaft 2). — handle 3). — Lens 4). —Induction Window 5）. — Induction Window 6). —On/Off button 7）. — touch draw slip for temperature 8）. —touch draw slip for illumination 9）function show

3. Environmental Requirement

Storage Transportation Environment:

Temperature: **－20℃－70℃**

Relative Humidity: **10％－90％**

Use Environment:

Temperature: **5℃－45℃**

Relative Humidity: **10％－90％**

Atmospheric Pressure:**500－1060hpa**

4.Specification:

Input Voltage : AC/DC 12-24V

Frequency: 50/60Hz

Power : 15W

Illumination: **8000**－30000 LUX can be adjusted

Color Temperature:**3500** K/5000Kcan be adjusted

Radiant heat ： ≦350W/㎡

Spot Size: 70x140mm (distance for 700mm)

Control Method : Induction Switch,8 grade Illumination of touch draw slip can be adjusted; 8 grade temperature of touch draw slip can be adjusted.

二、 Operational Approach:

1. The angle of handle on the led dental lamp can be adjusted according to the User`s require,and can be removable, as showed below, picture 2-1:

2.The angle of handle can be adjusted for rotatory force according to the User`s requires showed below, picture 2-2:

图2-1

图2-2

Picture 2

2. **Control Method:**

1）To open or close by induction:

To control the ON/OFF of the white light by crossing the sensor from 15-60mm,the buzzer will “range”once when close, and will “range” twice when open.8 grade temperature can be adjusted.

2) To open or close by button:

To control the ON/OFF of the white light by touching button, touching one time is on，touching twice is off.

3）temperature control: as showed below picture 3:

Picture 3

Put your hand in the place of button for temperature in picture 3, 8 grade temperature 3500K-5500K can be adjusted.

4）illuminance control:as showed below picture 4:

Picture 4

Put your hand in the place of button for illumination in picture 4，adjusting the illumination by left or right，,8 grade illuminance 8000-30000 LUX can be adjusted.

三、Washing and Sterilization

The transparent lens of the LED dental lamp can be scrubbed and cleaned by the lens paper.

The shell can be washed by neutral cleaning fluid, alcohol and disinfectant.and handle can be high-temperature sterilization.

四、 Installing Instruction and Specifications:

1. Installing Instruction

To connect the plug of the led dental lamp and arm, tightening the led dental lamp and arm by M5 screw, then connect the arm to the AC12-24V power of the dental chair.

2. **Schematic Circuit Diagram**

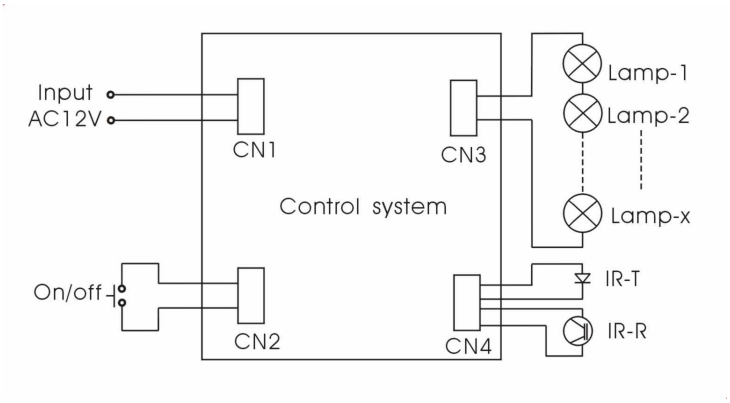

五、 **Packing list:**

（1） LED lamp 1set
（2） Handle 1 pair
（3） Allen key 1pcs
（4） Hex screw 1pcs